	MII/CRYSTAL	MII/OSCILLATOR	RMII/OSCILLATOR
R32	V	V	X
R33	V	V	X
R34	V	V	X
R37	V	V	X
R38	V	V	X
R39	V	V	X
R40	V	V	X
R41	V	V	X
R43	X	X	V
R44	V	V	X
R45	V	V	X
R36	X	X	V
R47	X	X	V
R48	X	X	X
R49	X	V	V
R57	V	X	X
R58	V	X	X
Y3	V	X	X
Y2	X	V	V

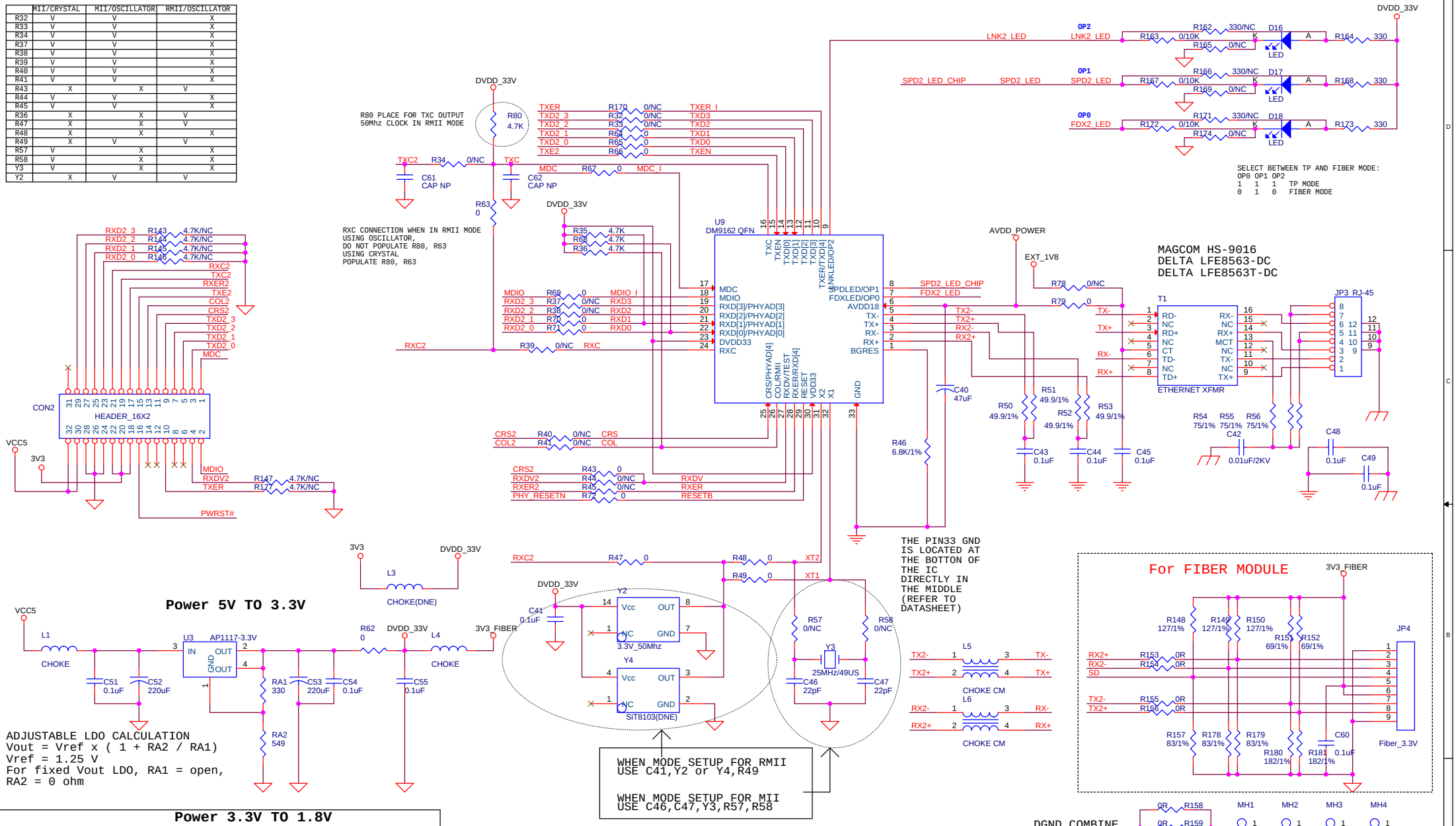

DAVICOM SEMICONDUCTOR INC.

Title: PHY Demo Board

Size: A3 | Document Number: 02PHY | Rev: 1.2

Date: Monday, December 10, 2012 | Sheet 2 of 3